CUBE, W

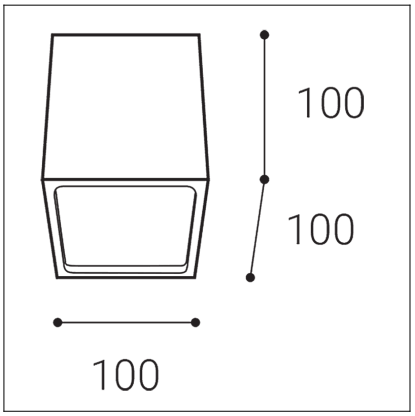

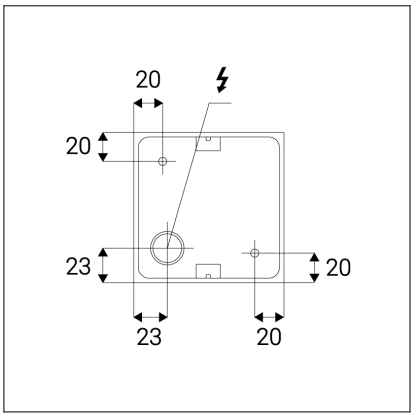

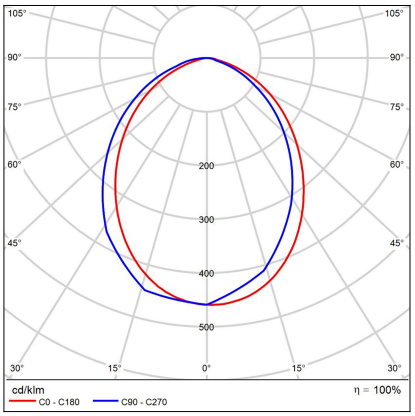

Code:	5111131
Color:	WHITE / 9003
Material:	ALUMINIUM/PMMA
Power:	12W
Color temperature:	3000K
Lumen output:	500lm
Efficacy:	42lm/W
Color rendering index:	90+
SDCM:	< 3
Light beam angle:	100°
Light Source:	LED
Dimmable:	ON/OFF
LED lifetime:	L80B20 50.000h
Driver:	320 mA
Voltage / Frequency:	220-240V AC, 50-60Hz
Dimensions luminaire:	100x100x100 mm
Product weight kg:	1.1
Packing carton:	12
Package dimensions:	160x150x120 mm
Remark:	wall mountable - yes

IP 54

5 year warranty